1565, 1575 & 1585 GRAINBELT CONVEYORS

PARTS LIST

SERIAL NOS. 77900 - 79599

1565 CONVEYOR GENERAL ASSEMBLY - GRAIN BELT CONVEYOR
SERIAL NOS. 77900 - 79599

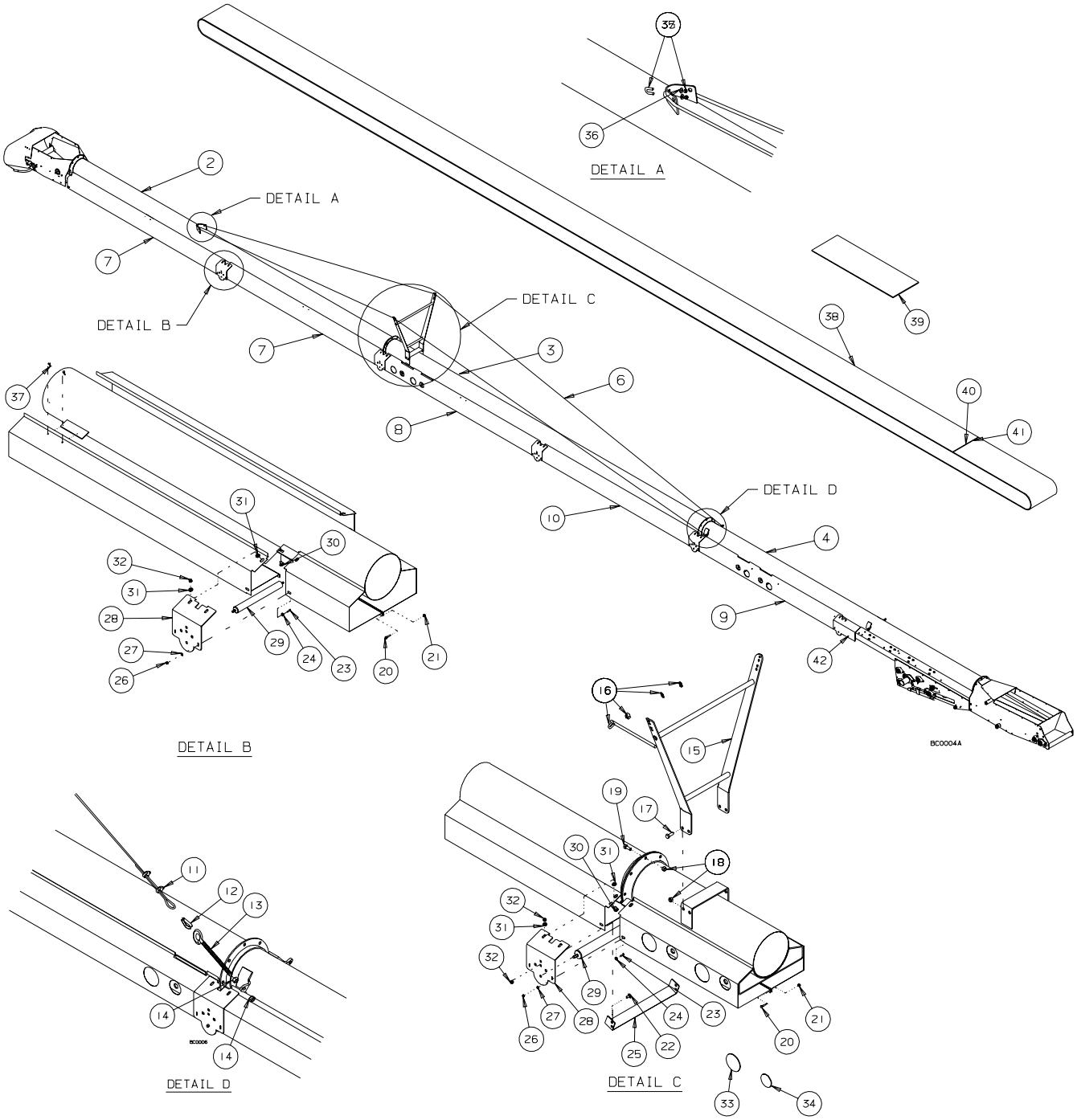

REF #	PART #	DESCRIPTION
2	C200719	TUBE, 20' UPPER
3	C200720	TUBE, 20' SUSPENSION - 65',75'
4	C200700A	LOWER TUBE ASSY - 65',75'
6	B008112	CABLE 5/16" x 70' GALV
7	C200624	COMMON WINDGUARD - LEFT
NS	C200624M	SUSPENSION WINDGUARD - RIGHT
8	C200622	UPPER SUSPENSION WINDGUARD - LEFT
NS	C200622M	UPPER SUSPENSION WINDGUARD - RIGHT
9	C200620	LOWER SUSPENSION WINDGUARD - LEFT
NS	C200620M	LOWER SUSPENSION WINDGUARD - RIGHT
10	C204626	UPPER TRUSS WINDGUARD - LEFT
NS	C204626M	UPPER TRUSS WINDGUARD - RIGHT
11	B008090	CABLE CLAMP, 5/16"
12	B008091	CABLE THIMBLE, 5/16"
13	B0020246	EYEBOLT, 5/8” x 9 3/8” c/w 6" THREAD
14	B001139	NUT, 5/8” HEX
15	C200735	TRUSS TOWER- 10” x 65',75'
16	B008090	CABLE CLAMP, 5/16"
17	B001040	BOLT, 1/2” x 1 1/4” UNC GR5 PLT
18	B001134	LOCKNUT, 1/2” STOVER
19	B0010401	BOLT, 1/2” x 1 1/4” UNC GR8 PLT
20	B001001	BOLT, 1/4” x 1/2” UNC GR5 PLT
21	B001124	LOCKNUT, 1/4” NYLOCK GR5
22	B0010819	CARRIAGE BOLT 3/8” x 3/4”
23	B001420	SCREW #10-24 x 3/4” L PANHEAD,SS
24	B027497	SHOULDER WASHER
25	C200610	RETURN BRACE
26	B0011205	LOCKNUT #10-24 NYLOCK
27	B0011459	FLATWASHER, #10
28	C200608	ROLLER BRACKET
29	B021250	ROLLER-1.9"OD x 18" LONG
30	B001082	CARRIAGE BOLT, 3/8” x 1”
31	B0011495	WASHER-SAE, 3/8”
32	B0011325	LOCKNUT 3/8” STOVER
33	B028187	4” PLASTIC PLUG
34	B028186	3” PLASTIC PLUG
35	B008090	CABLE CLAMP, 5/16"
36	B001147	FLATWASHER, 1/4”
37	B002036	#10 x 5/8” TEK Screw
38	B018620	PVC BELT - 15” WIDE x 135’ LONG - LACED
38	B018621	RUBER BELT - 15” WIDE x 135’ LONG - LACED
39	B018611	PVC BELT - 15” WIDE x 10’ LONG - LACED
39	B018612	RUBBER BELT - 15” WIDE x 10’ LONG - LACED
39	B018613	PVC BELT - 15” WIDE x 20’ LONG - LACED
39	B018614	RUBBER BELT - 15” WIDE x 20’ LONG - LACED
40	B021321	ALLIGATOR LACING - 15” c/w PIN
41	C200652	ALLIGATOR LACING PIN ONLY - 15”
NS	C204584	15” LACING PIN KIT (includes 15” of Pin & two Retaining Washers)
42	C205147LA	EZTRAK ROLLER BRACKET ASS’Y - LEFT
NS	C205147RA	EZTRAK ROLLER BRACKET ASS’Y - RIGHT

1575 CONVEYOR ASSEMBLY - GRAIN BELT CONVEYOR
SERIAL NOS. 77900 - 79599

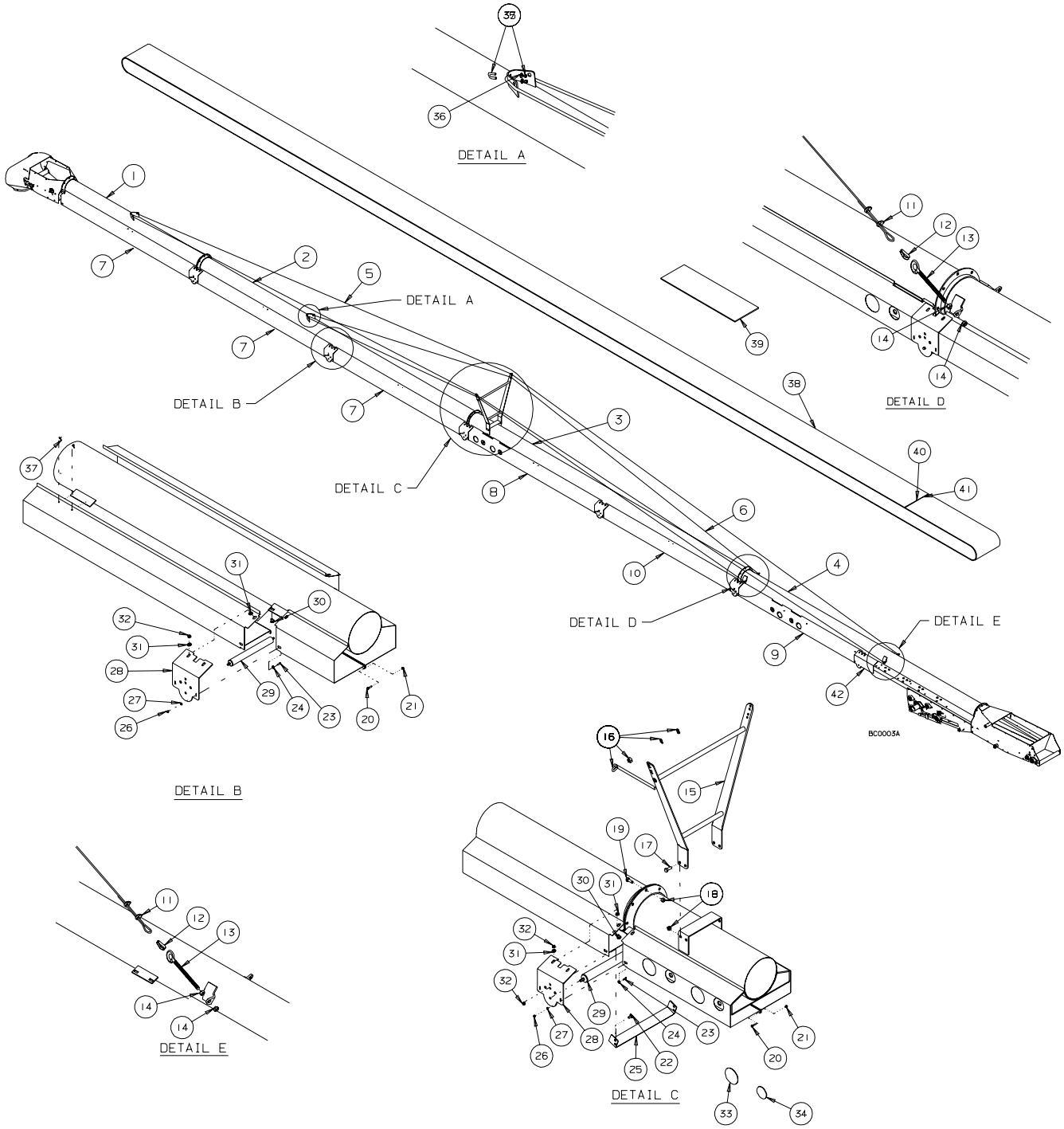

REF #	PART #	DESCRIPTION
1	C200721	TUBE, 10' UPPER EXT.- 10” x 75
2	C200719	TUBE, 20' UPPER
3	C200720	TUBE-20' SUSPENSION-65',75'
4	C200700A	LOWER TUBE ASSY-10” x 65',75'
5	B008304	CABLE 3/8" x 115' GALV
6	B008112	CABLE 5/16" x 70' GALV
7	C200624	COMMON WINDGUARD-LEFT
NS	C200624M	COMMON WINDGUARD-RIGHT
8	C200622	UPPER SUSPENSION WINDGUARD-LEFT
NS	C200622M	UPPER SUSPENSION WINDGUARD-RIGHT
9	C200620	LOWER SUSPENSION WINDGUARD-LEFT
NS	C200620M	LOWER SUSPENSION WINDGUARD-RIGHT
10	C204626	UPPER TRUSS WINDGUARD - LEFT
NS	C204626M	UPPER TRUSS WINDGUARD - RIGHT
11	B008090	CABLE CLAMP, 5/16"
12	B008091	CABLE THIMBLE, 5/16"
13	B0020246	EYEBOLT, 5/8” x 9 3/8” c/w 6" THREAD
14	B001139	NUT, 5/8” HEX
15	C200735	TRUSS TOWER- 10” x 65',75'
16	B008090	CABLE CLAMP, 5/16"
17	B001040	BOLT, 1/2” x 1 1/4” UNC GR5 PLT
18	B001134	LOCKNUT, 1/2” STOVER
19	B0010401	BOLT, 1/2” x 1 1/4” UNC GR8 PLT
20	B001001	BOLT, 1/4” x 1/2” UNC GR5 PLT
21	B001124	LOCKNUT, 1/4” NYLOCK GR5
22	B0010819	CARRIAGE BOLT 3/8” x 3/4”
23	B001420	SCREW #10-24 x 3/4” L PANHEAD,SS
24	B027497	SHOULDER WASHER
25	C200610	RETURN BRACE
26	B0011205	LOCKNUT #10-24 NYLOCK
27	B0011459	FLATWASHER, #10
28	C200608	ROLLER BRACKET
29	B021250	ROLLER-1.9"OD x 18" LONG
30	B001082	CARRIAGE BOLT, 3/8” x 1”
31	B0011495	WASHER-SAE, 3/8”
32	B0011325	LOCKNUT 3/8” STOVER
33	B028187	4” PLASTIC PLUG
34	B028186	3” PLASTIC PLUG
35	B008090	CABLE CLAMP, 5/16"
36	B001147	FLATWASHER, 1/4”
37	B002036	#10 x 5/8” TEK Screw
38	B018625	PVC BELT - 15” WIDE x 155’ LONG - LACED
38	B018626	RUBER BELT - 15” WIDE x 155’ LONG - LACED
39	B018611	PVC BELT - 15” WIDE x 10’ LONG - LACED
39	B018612	RUBBER BELT - 15” WIDE x 10’ LONG - LACED
39	B018613	PVC BELT - 15” WIDE x 20’ LONG - LACED
39	B018614	RUBBER BELT - 15” WIDE x 20’ LONG - LACED
40	B021321	ALLIGATOR LACING - 15” c/w PIN
41	C200652	ALLIGATOR LACING PIN ONLY - 15”
NS	C204584	15” LACING PIN KIT (includes 15” of Pin & two Retaining Washers)
42	C205147LA	EZTRAK ROLLER BRACKET ASS’Y - LEFT
NS	C205147RA	EZTRAK ROLLER BRACKET ASS’Y - RIGHT

1585 CONVEYOR ASSEMBLY - GRAIN BELT CONVEYOR
SERIAL NOS. 77900 - 79599

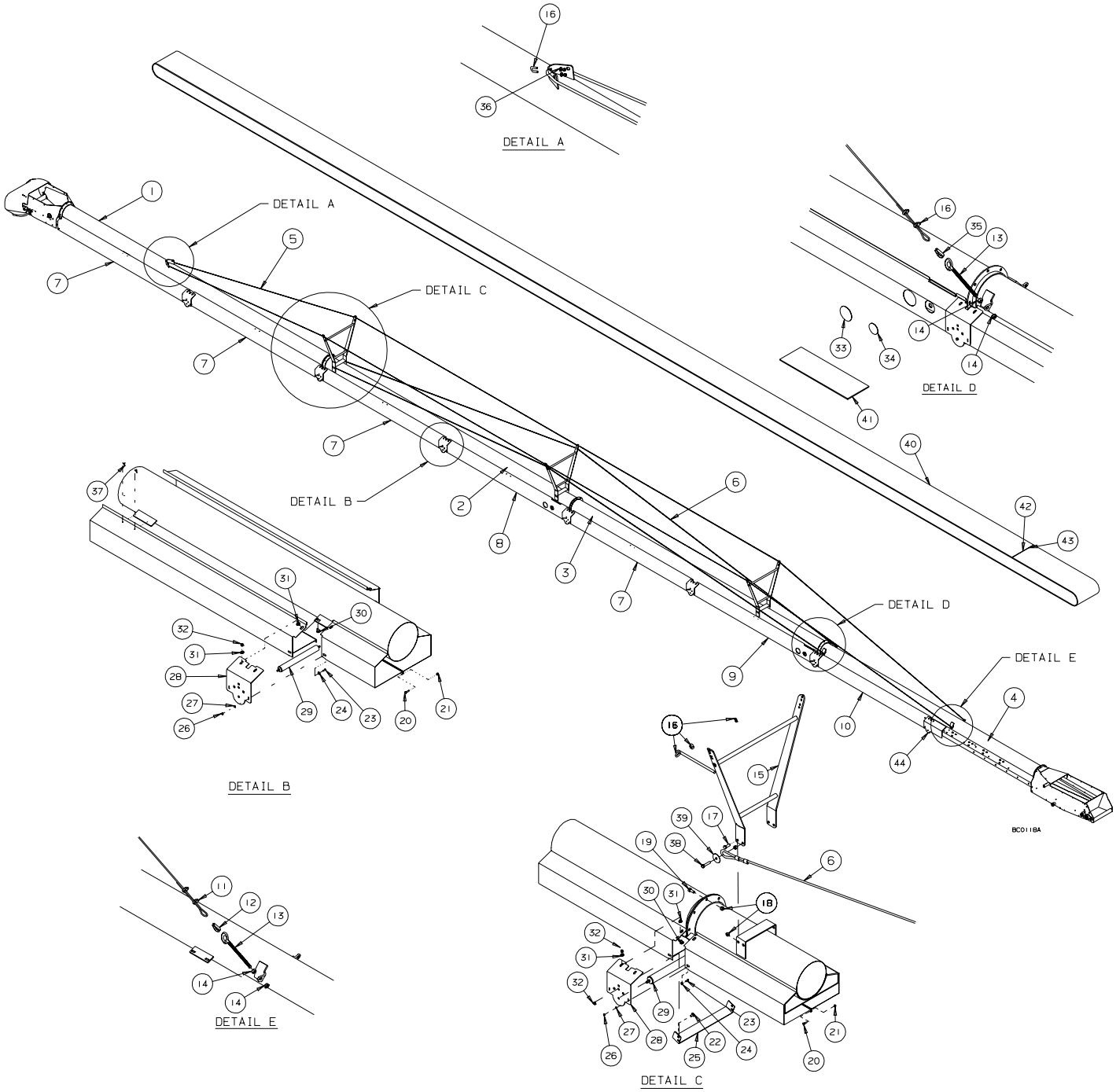

REF #	PART #	DESCRIPTION
1	C200719	TUBE, 20' UPPER
2	C200926	TUBE, 20' UPPER SUSPENSION - 85’
3	C200930	TUBE-20' LOWER SUSPENSION - 85'
4	C200929A	LOWER TUBE ASSY-10” x 85'
5	B008315	CABLE 1/2" x 133' GALV
6	B008302	CABLE 3/8" x 41’-6” GALV
7	C200624	SUSPENSION WINDGUARD - LEFT
NS	C200624M	SUSPENSION WINDGUARD - RIGHT
8	C201966	UPPER SUSPENSION WINDGUARD - LEFT
NS	C201966M	UPPER SUSPENSION WINDGUARD - RIGHT
9	C201965	LOWER SUSPENSION WINDGUARD - LEFT
NS	C201965M	LOWER SUSPENSION WINDGUARD - RIGHT
10	C201284	LOWER WIND GUARD - LEFT - 108 7/16”
NS	C201284M	LOWER WIND GUARD - RIGHT - 108 7/16”
11	B008085	CABLE CLAMP, 1/2"
12	B008086	CABLE THIMBLE, 1/2"
13	B0020246	EYEBOLT, 5/8” x 9 3/8” c/w 6" THREAD
14	B001139	NUT, 5/8” HEX
15	C200735	TRUSS TOWER- 10” x 65',75'
16	B008080	CABLE CLAMP, 3/8"
17	B001040	BOLT, 1/2” x 1 1/4” UNC GR5 PLT
18	B001134	LOCKNUT, 1/2” STOVER
19	B0010401	BOLT, 1/2” x 1 1/4” UNC GR8 PLT
20	B001001	BOLT, 1/4” x 1/2” UNC GR5 PLT
21	B001124	LOCKNUT, 1/4” NYLOCK GR5
22	B0010819	CARRIAGE BOLT 3/8” x 3/4”
23	B001420	SCREW #10-24 x 3/4” L PANHEAD,SS
24	B027497	SHOULDER WASHER
25	C200610	RETURN BRACE
26	B0011205	LOCKNUT #10-24 NYLOCK
27	B0011459	FLATWASHER, #10
28	C200608	ROLLER BRACKET
29	B021250	ROLLER-1.9"OD x 18" LONG
30	B001082	CARRIAGE BOLT, 3/8” x 1”
31	B0011495	WASHER-SAE, 3/8”
32	B0011325	LOCKNUT 3/8” STOVER
33	B028187	4” PLASTIC PLUG
34	B028186	3” PLASTIC PLUG
35	B008081	CABLE THIMBLE, 3/8"
36	B001148	FLATWASHER, 5/16”
37	B002036	#10 x 5/8” TEK Screw
38	B001043	BOLT, 1/2”x 1 3/4”
39	B0020715	FLATWASHER, 2”OD x 17/32” ID
40	B018627	PVC BELT - 15” WIDE x 175’ LONG - LACED
40	B018628	RUBER BELT - 15” WIDE x 175’ LONG - LACED
41	B018611	PVC BELT - 15” WIDE x 10’ LONG - LACED
41	B018612	RUBBER BELT - 15” WIDE x 10’ LONG - LACED
41	B018613	PVC BELT - 15” WIDE x 20’ LONG - LACED
41	B018614	RUBBER BELT - 15” WIDE x 20’ LONG - LACED
42	B021321	ALLIGATOR LACING - 15” c/w PIN
43	C200652	ALLIGATOR LACING PIN ONLY - 15”
NS	C204584	15” LACING PIN KIT (includes 15” of Pin & two Retaining Washers)
44	C205147LA	EZTRAK ROLLER BRACKET ASS’Y - LEFT
NS	C205147RA	EZTRAK ROLLER BRACKET ASS’Y - RIGHT

INTAKE ASSEMBLY - GRAIN BELT CONVEYOR
SERIAL NOS. 77900 - 79599

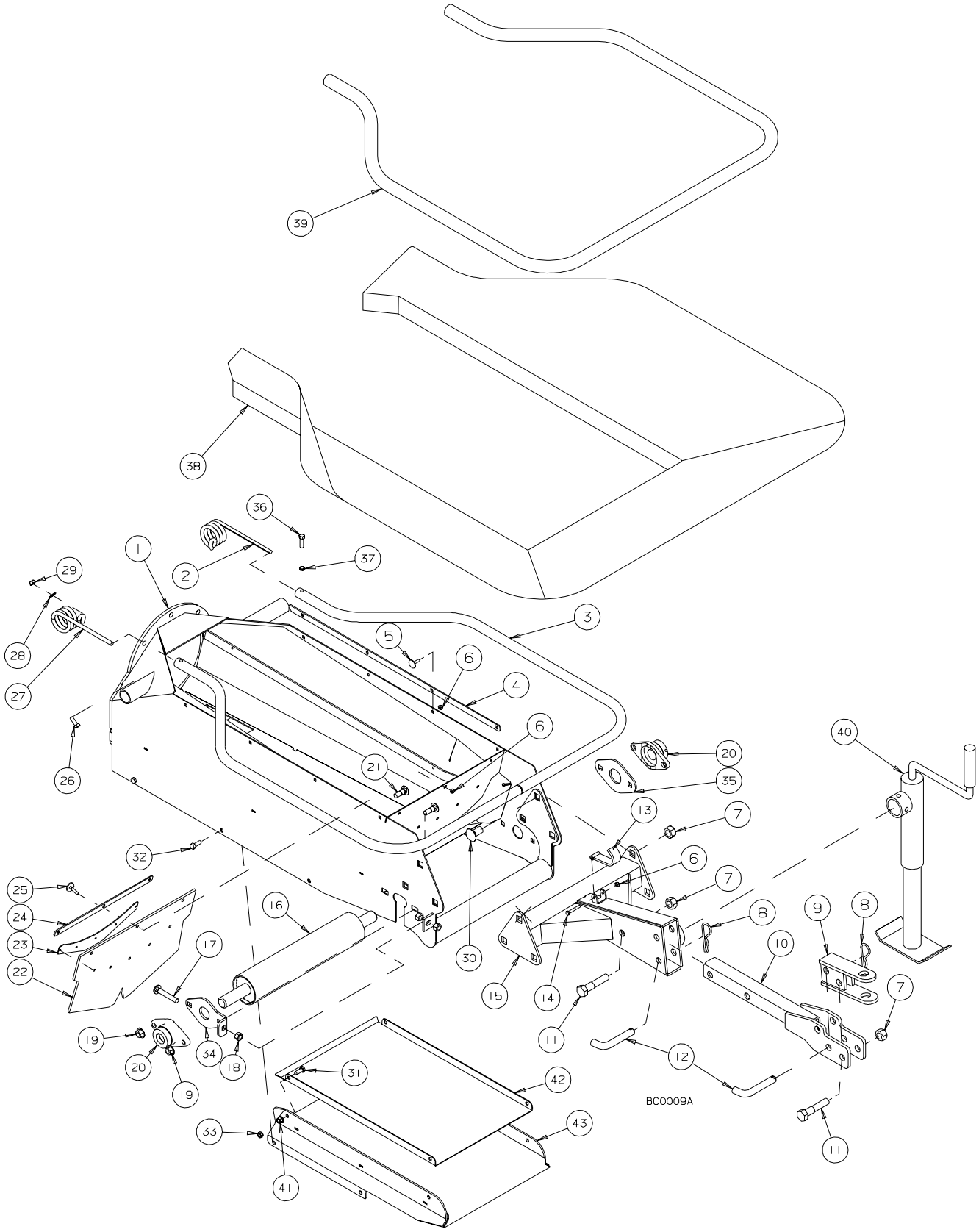

REF #	PART #	DESCRIPTION
1	C201790	10" HOPPER- CUPPED
2	B021742R	SPRING, TRANS HOPPER R, 1/2” DIA
3	C200791	HOPPER RAIL
4	C200613	HOPPER STRAP LONG
5	B002227	ELEVATOR BOLT,1/4” x 3/4”
6	B001124	LOCKNUT, 1/4” NYLOCK
7	B001154	LOCKNUT, 3/4” STOVER
8	B002091	HAIRPIN, .177” x 3 3/4”
9	C202405	HITCH CLEVIS
10	C202406	HITCH - MALE
11	B001105	BOLT, 3/4” x 4”
12	B0020315	L PIN, 3/4” x 4 1/8” w/HOLE
13	C201785	FLIP RESTRAINT
14	B001004	BOLT, 1/4” x 1 3/4”
15	C200931	HITCH - FEMALE
16	C200708	ROLLER - 3 1/2" x 16 1/2”
17	B001091	CARRIAGE BOLT, 1/2” x 3” FULL THREAD
18	B001135	NUT, 1/2” HEX
19	B001409	1/2” SERRATED FLANGE NUT
20	B017201	BEARING, 1 1/4"-206, 2 BOLT FLANGE
21	B0010885	CARRIAGE BOLT, 1/2” x 1 1/2” - SHORT NECK
22	B027516	FLASHING, MAIN REAR, 2 PLY RUBBER
23	C200612	FLASHING PLATE
24	C200614	HOPPER END
25	B002226	ELEVATOR BOLT, 1/4” x 1”
26	B001024	BOLT, 3/8” x 1” UNC GR5 PLT
27	B021742L	SPRING, TRANS HOPPER L, 1/2” DIA
28	B0011495	WASHER-SAE, 3/8”
29	B0011325	LOCKNUT, 3/8” STOVER
30	B001098	CARRIAGE BOLT, 3/4" x 2"
31	B001023	BOLT, 3/8” x 3/4”
32	B001024	BOLT, 3/8” x 1”
33	B001132	LOCKNUT, 3/8”
34	C200615	SHAFT GUARD- 1.25"
35	C200609	BEARING PLATE
36	B001025	BOLT, 3/8” x 1 1/4”
37	B001130	JAM NUT, 3/8”
38	B021420	HOPPER FABRIC - BLACK
39	B024081	FLEXIBLE CONDUIT - 1” ID x 90” LG.
40	B030529	JACK - 3000 LBS.
41	B0011326	3/8” FLANGE LOCK NUT
42	C205149	15S LONG TRACKING TOP
43	C205143	15S BELT TRACKING BOX

DISCHARGE ASSEMBLY - GRAIN BELT CONVEYOR
SERIAL NOS. 77900 - 79599

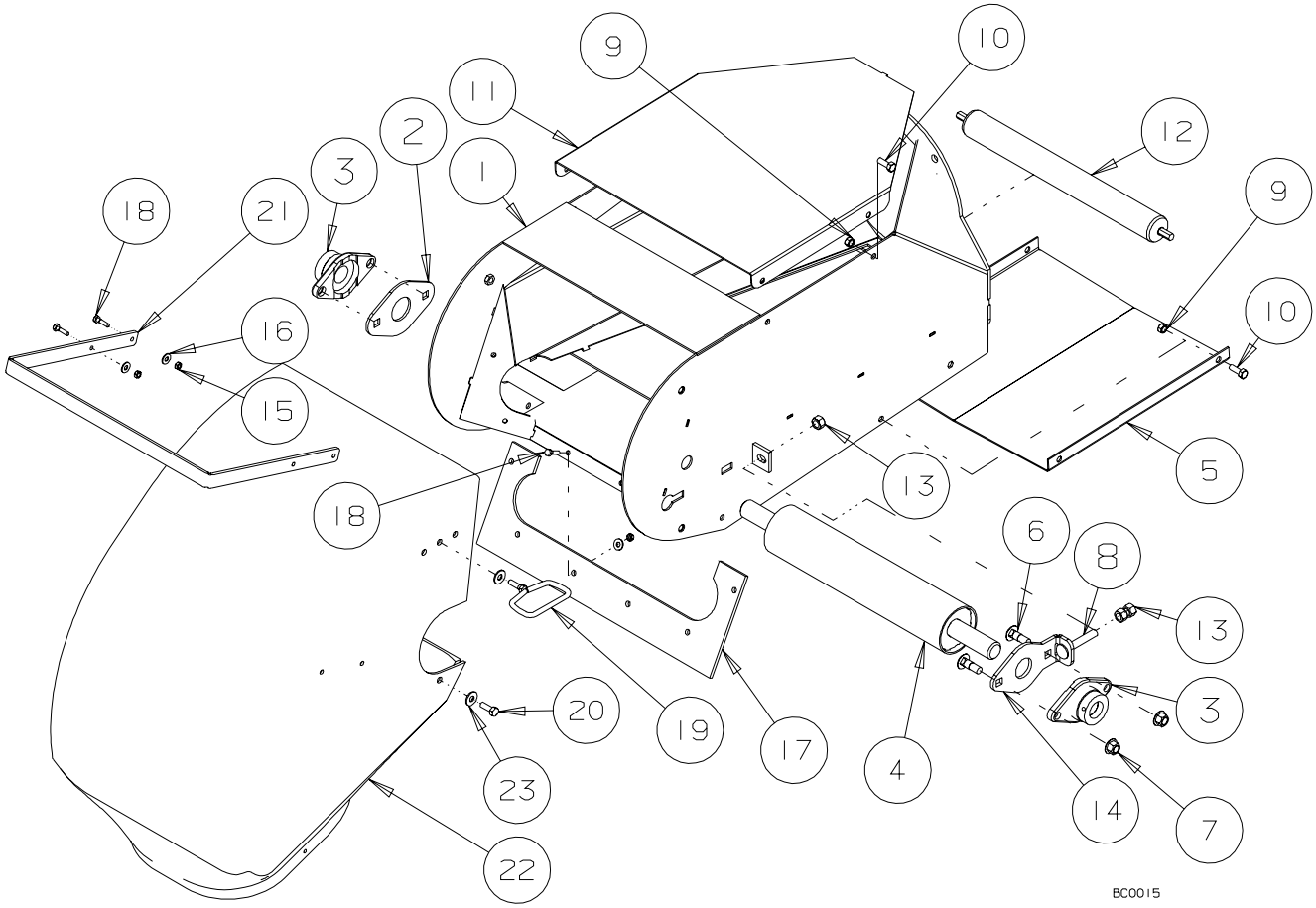

REF #	PART #	DESCRIPTION
1	C200717H	DISCHARGE 65', 75'
2	C200609	BEARING PLATE
3	B017201	BEARING, 1 1/4” - 2 BOLT FLNG INA
4	C200708	ROLLER, 3 1/2” x 16 1/2”
5	C200605	DISCHARGE BOTTOM GUARD
6	B001088	CARRIAGE BOLT, 1/2” x 1 1/2”
7	B001409	1/2” SERRATED FLANGE NUT
8	B001091	CARRIAGE BOLT, 1/2” x 3”
9	B0011325	LOCKNUT, 3/8” STOVER
10	B001024	BOLT, 3/8” x 1” UNC GR5 PLT.
11	C200644	DISCHARGE CAP MAIN
12	B021250	ROLLER, 1.9" OD x 18"
13	B001135	NUT, 1/2” HEX
14	C200615	SHAFT GUARD - 1.25"
15	B001124	LOCKNUT, 1/4” NYLOCK GR5
16	B001147	FLATWASHER, 1/4”
17	B027519	WIPER, DISCHARGE, 2 PLY RUBBER
18	B001003	BOLT, 1/4” x 1” UNC GR5 PLT
19	C200797	DISCHARGE HANDLE
20	B001024	BOLT, 3/8” x 1” UNC GR5 PLT
21	C200641	TRANSFER HANDLE
22	B027600	DISCHARGE SPOUT, 10" TUBE
23	B001149	FLATWASHER, 3/8”

S DRIVE ASSEMBLY - GRAIN BELT CONVEYOR
SERIAL NOS. 77900 - 79599

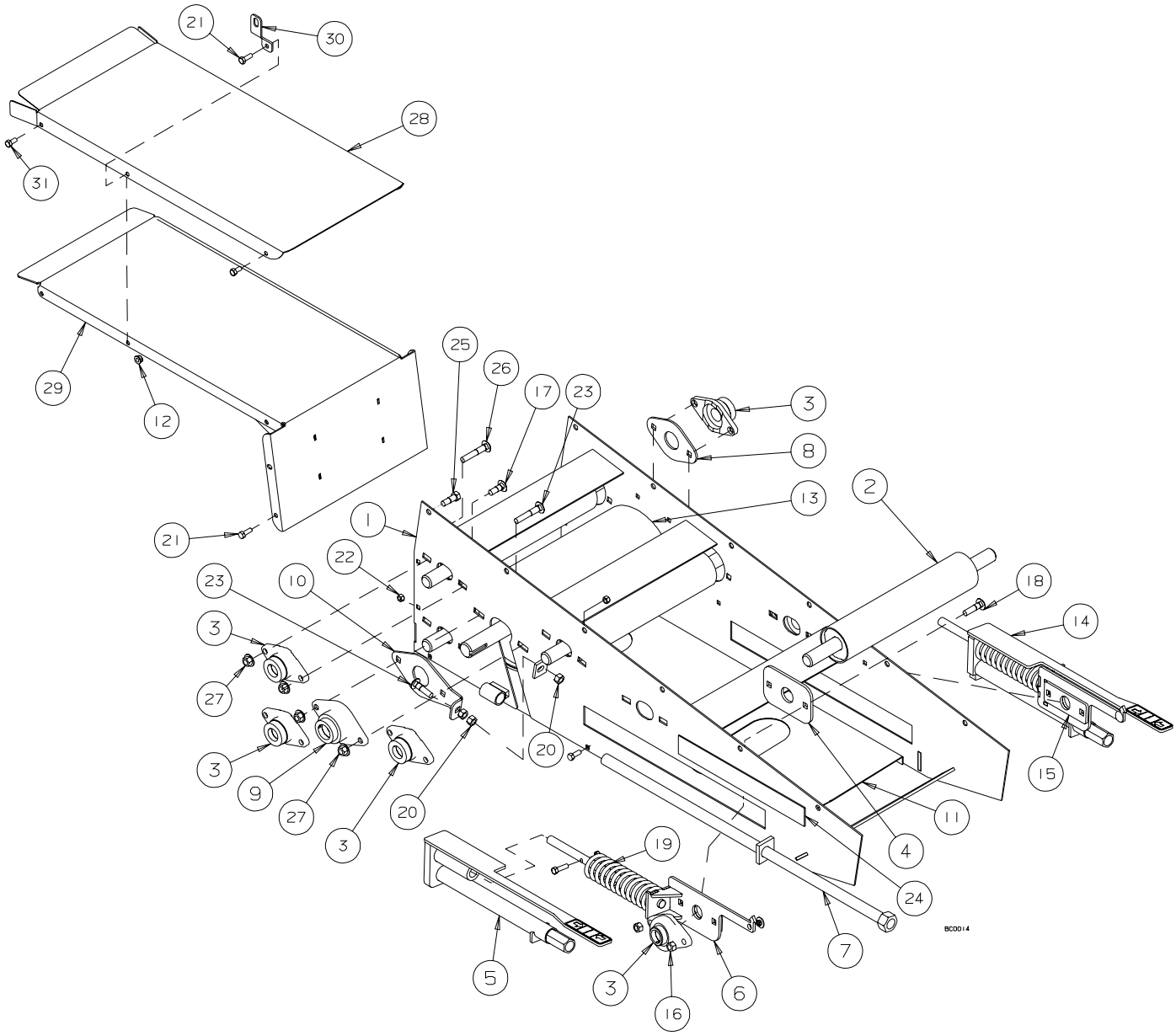

REF #	PART #	DESCRIPTION
1	C202716	S-DRIVE
2	C200708	S-DRIVE ROLLER, 3 1/2"
3	B017201	BEARING, 1 1/4” -2 BOLT FLANGE - INA
4	C200640	S-DRIVE BACKPLATE
5	C204731LA	SPRING INDICATOR ASS’Y - LEFT
6	C204732L	TENSION PULL, LEFT
7	C200728	ADJUSTMENT ROD
8	C200609	BEARING PLATE
9	B017223	BEARING, 1 1/2” PCJT
10	C202416	1 1/2” BEARING PLATE
11	C200604	S-DRIVE UNDER GUARD
12	B0011326	3/8” LOCKING FLANGE NUT
13	C200715	ROLLER, 9"
14	C204731RA	SPRING INDICATOR ASS’Y - RIGHT
15	C204732R	TENSION PULL, RIGHT
16	B001136	LOCKNUT, 1/2”
17	B0010885	CARRIAGE BOLT, 1/2” x 1 1/2” - SHORT NECK
18	B001090	CARRIAGE BOLT, 1/2” x 2”
19	B0210731	SPRING, COMPRESSION, 2 1/2” DIA x 16” x 0.343” WIRE
20	B001135	NUT, 1/2” HEX
21	B001024	BOLT, 3/8” x 1”
22	B0011325	LOCKNUT, 3/8” STOVER
23	B001191	CARRIAGE BOLT, 1/2” x 3”
24	B029700L	DECAL, S-DRIVE INDICATOR LEFT
NS	B029700R	DECAL, S-DRIVE INDICATOR RIGHT
25	B001039	BOLT, 1/2” x 1”
26	B0010895	CARRIAGE BOLT, 1/2” x 1 3/4” - SHORT NECK
27	B001409	1/2” SERRATED FLANGE NUT
28	C205146	TRACKING SKID TOP
29	C205145	EZTRAK BASE PLATE
30	C205573	EZTRAK STABILIZER
31	B001023	BOLT, 3/8” x 3/4”

UNDERCARRIAGE ASSEMBLY - GRAIN BELT CONVEYOR
SERIAL NOS. 77900 - 79599

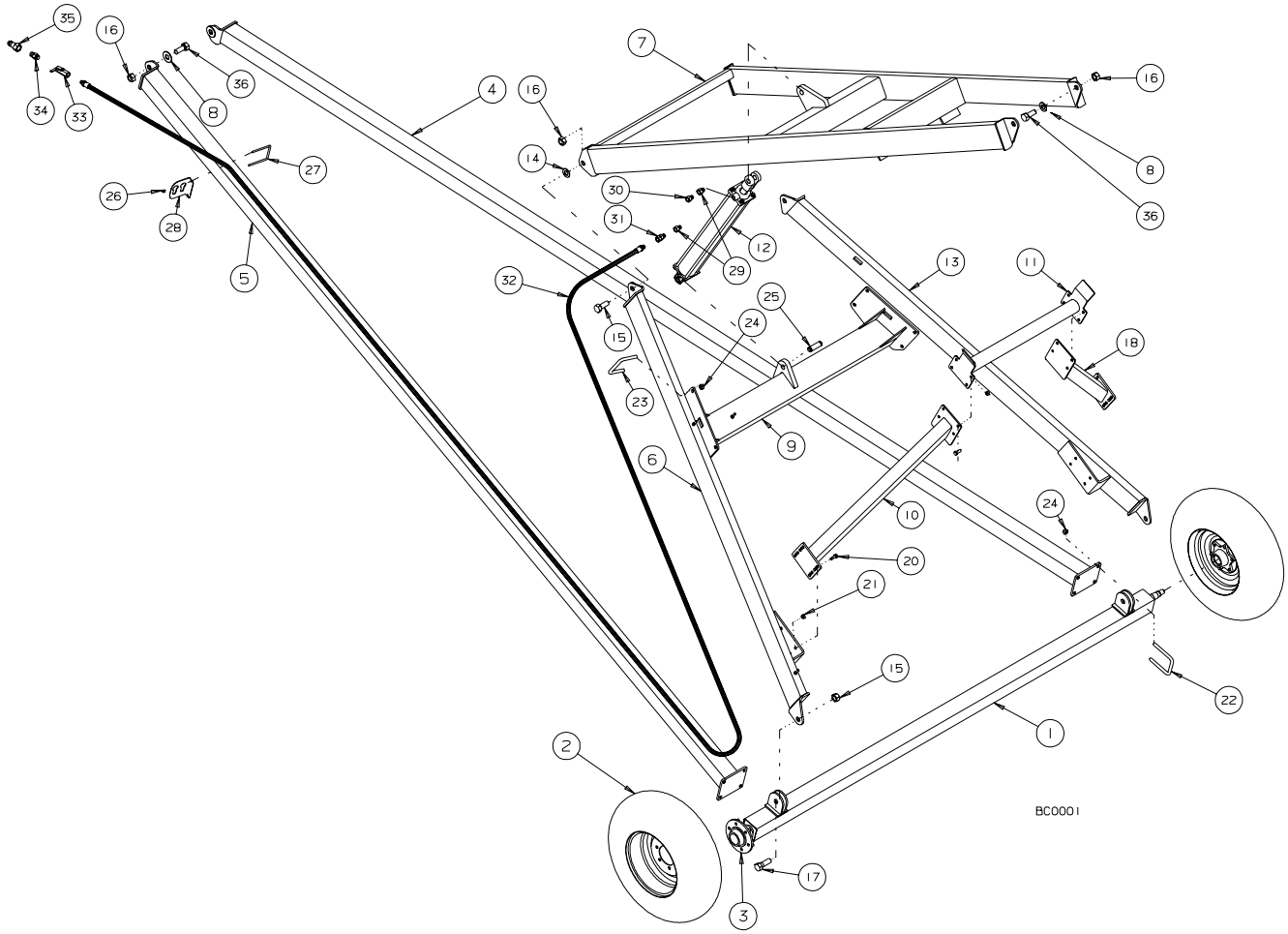

REF #	PART #	DESCRIPTION
1	C200702	AXLE WELD - 65’, 75’
1	C201215	AXLE WELD - 85’
2	B011221	TIRE P255-70R-15 AGRIMAC MNTD
3	B011003	HUB TANDEM COMP 6 BOLT
4	C200705L	AXLE ARM - LEFT - 65’, 75’
4	C200884L	AXLE ARM - LEFT - 85’
5	C200705R	AXLE ARM - RIGHT - 65’, 75’
5	C200884R	AXLE ARM - RIGHT - 85’
6	C200740	LIFT ARM, RIGHT - 65', 75'
6	C200883R	LIFT ARM, RIGHT - 85’
7	C200739	LADDER - 65’, 75’
7	C200897	LADDER - 85’
8	B001159	FLATWASHER, 1”
9	C200738	LIFT CROSS - 65', 75'
9	C200900	LIFT CROSS - 85’
10	C200727	TRANSPORT UPRIGHT, RIGHT
11	C201231	OFFSET TRANSPORT REST
12	B0191675	HYDRAULIC CYLINDER, 4" x 30"- 3/8" ORB, 2" ROD - 75’, 85’
12	B019166	HYDRAULIC CYLINDER, 3 1/2" x 30"- 3/8"ORB - 65'
13	C200737	LIFT ARM, LEFT - 65', 75'
13	C200883L	LIFT ARM, LEFT - 85’
14	B001158	FLATWASHER, 1”, SAE
15	B0011175	BOLT, 1” x 2 1/2” UNC GR5 PLT
16	B001075	LOCKNUT, 1”
17	B0011177	BOLT, 1” x 3” UNC GR5 PLT
18	C200730	TRANSPORT UPRIGHT, LEFT
19	B011504	WHEEL BOLT, 4 BOLT & 6 BOLT HUB
20	B001040	BOLT, 1/2” x 1 1/4”
21	B001134	LOCKNUT, 1/2”, STOVER
22	B0020188	5/8" x 4" SQ U-BOLT x 5.5” LG
23	B0020184	5/8" x 6" SQ U-BOLT x 3.5" LG
24	B001141	LOCKNUT, 5/8”
25	B019178	CYLINDER PIN STANDARD
26	B001127	LOCKNUT, 5/16”
27	B002010	U-BOLT, SQUARE, 5/16” x 4”
28	C200607	HYDRAULIC TIP HOLDER
29	B019435	HYDRAULIC ADAPTER, 3/8” FPT x #6 MORB
30	B019305	BREATHER, 3/8” MPT
31	B019415	HYDRAULIC RESTRICTOR, 3/8” MPT x 3/8” FPT x 1/16” DIA
32	B019287	HYDRAULIC HOSE, 3/8” x 53’ LONG - 3/8” MPT BOTH ENDS - 65’ & 75’
32	B019289	HYDRAULIC HOSE, 3/8” x 61’ LONG - 3/8” MPT BOTH ENDS - 85’
33	B019300	BALL VALVE, 3/8” FPT
34	B019516	REDUCER NIPPLE, 3/8” MPT x 1/2” MPT
35	B019200	PIONEER MALE TIP, 1/2” FPT
36	C200666	SUSPENSION BOLT

HUB ASSEMBLY - GRAIN BELT CONVEYOR
SERIAL NOS. 77900 - 79599

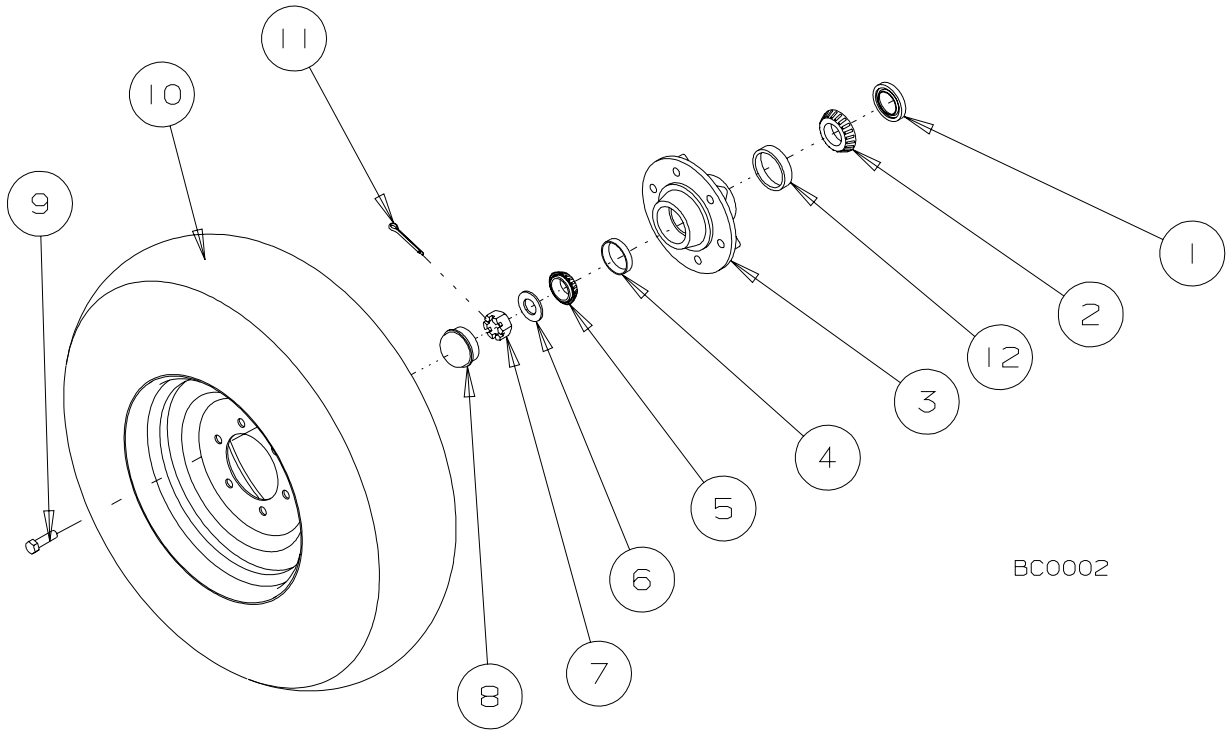

REF #	PART #	DESCRIPTION
1	B011650	SEAL, SPRAYER HUB, 620-830
2	B011651	HUB, CONE INNER HUB, 620-830
3	B011003	6 BOLT HUB COMPLETE
3	B011668	6 BOLT HUB C/W CUPS
4	B011602	OUTER CUP - 6 BOLT HUM (LM-67010)
5	B011603	OUTER CONE - 6 BOLT HUB (LM-67048)
6	B001158	1" SAE FLATWASHER
7	B011681	1" - 14 TPI UNF CASTLE NUT
8	B011503	DUST CAP (DC13)
9	B011504	WHEEL BOLT .500-20 UNF x 1.75” (WB10)
10	B011221	TIRE P255-70R-15 AGRIMAC MNTD
11	B002054	3/16" x 2" COTTER PIN
12	B011652	INNER CUP - 6 BOLT HUB (LM-29710)

PTO SHAFT ASSEMBLY - GRAIN BELT CONVEYOR
SERIAL NOS. 77900 - 79599

WEASLER SERIES 14R

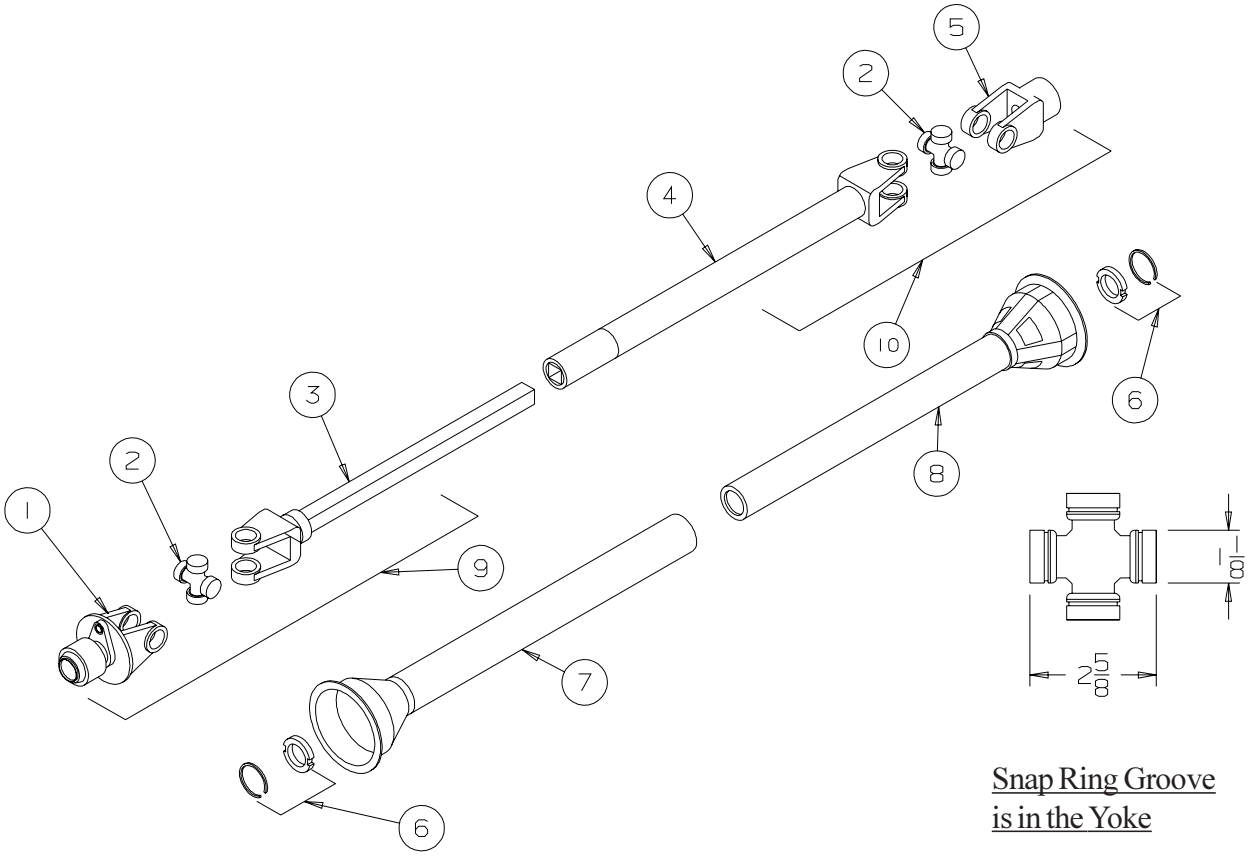

REF #	PART NO.	DESCRIPTION	QTY.
1	B003066	Shear Yoke - 6 Spline	1
2	B0037101	Cross & Bearing Kit	2
3	B003853	Input Yoke & Shaft	1
4	B003854	Output Yoke & Tube	1
5	B003855	Implement Yoke - 1 1/2” Bore	1
6	B003776	Shield Bearing	2
7	B003857	Outer Shield	1
8	B003858	Inner Shield	1
9	B003850	Tractor Half of Shaft c/w Guard - 6 Spline	1
10	B003851	Implement Half of Shaft c/w Guard	1
NS	B003102	Shear Bolt - 5/16” x 1” Bolt - Gr.5	1
NS	B003103	Shear Nut - 5/16” Stover Lock Nut	1
	B003060	PTO Shaft - Complete	

PTO DRIVE KIT - GRAIN BELT CONVEYOR
SERIAL NOS. 77900 - 79599

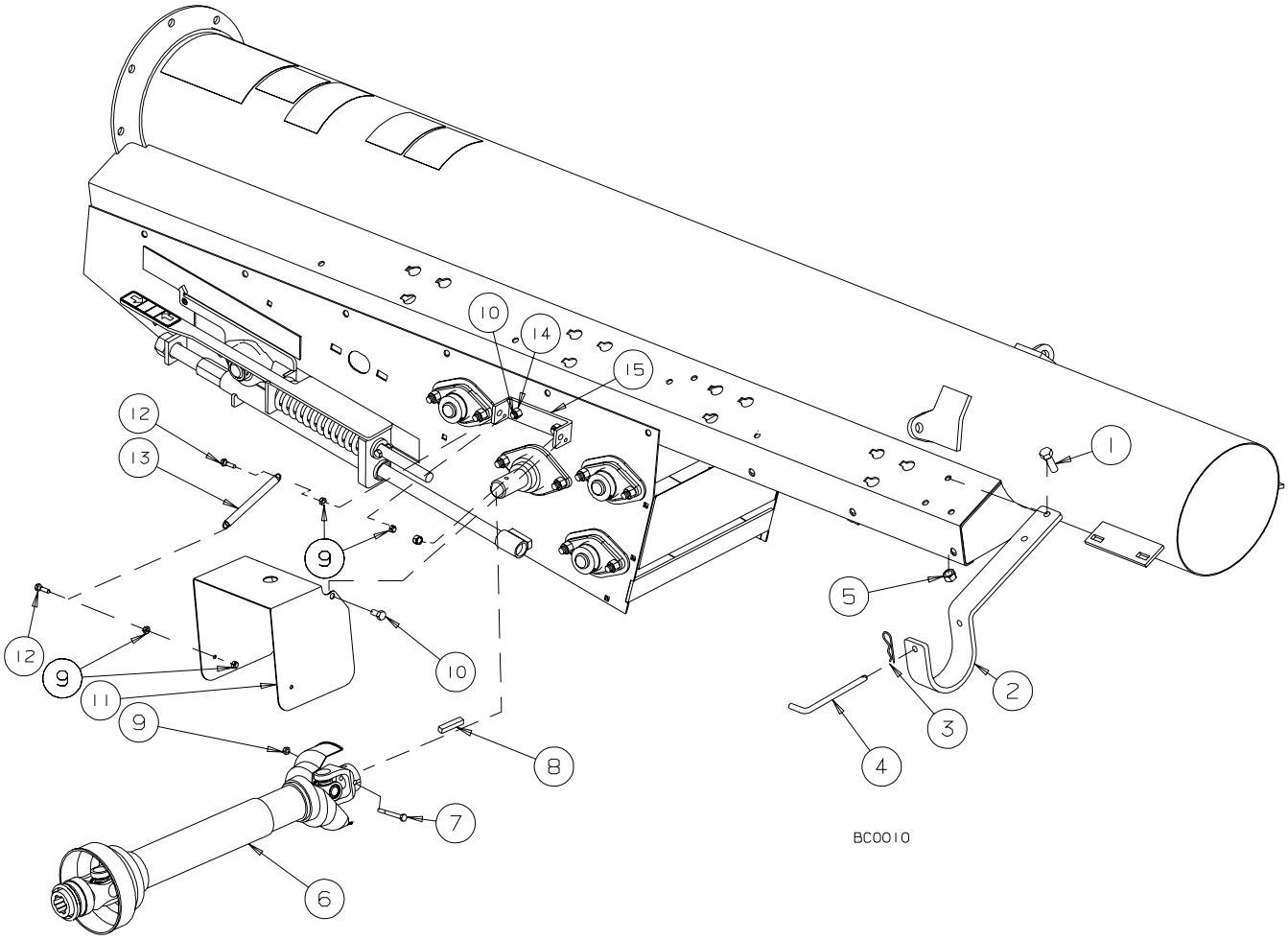

REF #	PART #	DESCRIPTION
1	B001041	BOLT, 1/2” x 1 1/2” UNC GR5 PLT
2	C200630	PTO SHAFT HOLDER
3	B002092	HAIRPIN, .094” x 2 1/4”
4	B0020295	L PIN, 3/8" x 4 3/4" w/HOLE
5	B001136	LOCKNUT, 1/2”
6	B003060	PTO SHAFT - BELT CONVEYOR
7	B0010061	BOLT, 1/4” x 3” UNC GR5 PLT
8	C200649	KEY, 3/8" x 2"
9	B001124	LOCKNUT, 1/4” NYLOCK GR5
10	B001023	BOLT, 3/8” x 3/4” UNC GR5 PLT
11	C200661	PTO SHIELD
12	B0010036	BOLT, 1/4” x 1 1/4” UNC GR5 PLT
13	B021074	SPRING, EXPANSION, PLTD 70-20
14	B0011325	LOCKNUT, 3/8” STOVER
15	C200662	PTO BRACKET
16	B001082	CARRIAGE BOLT, 3/8” x 1”

GAS ENGINE DRIVE KIT - GRAIN BELT CONVEYOR
SERIAL NOS. 77900 - 79599

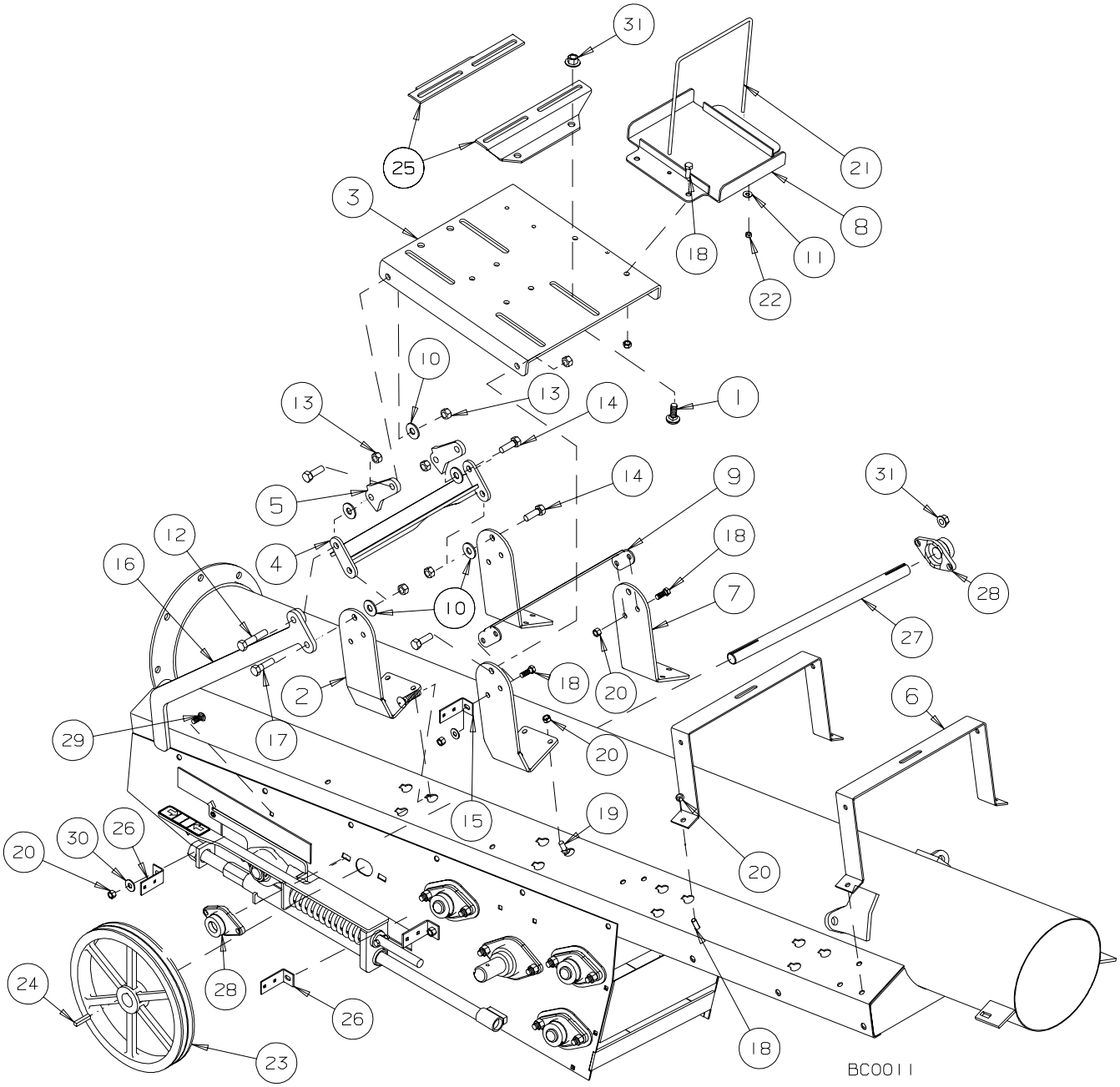

REF #	PART #	DESCRIPTION
1	B0010875	CARRIAGE BOLT, 1/2” x 1 1/4” UNC
2	C200627	ENGINE MOUNT
3	C200619	ENGINE PLATE
4	C200747	MOTOR MOUNT TIGHTENER
5	C200628	ENGINE LEVER
6	C200617	TANK BASE
7	C200629	ENGINE UPRIGHT
8	C200748	BATTERY HOLDER
9	C200618	MOTOR BASE BRACE
10	B001151	FLATWASHER, 1/2”
11	B001147	FLATWASHER, 1/4”
12	B001045	BOLT, 1/2” x 2 1/4” UNC GR5 PLT
13	B001134	LOCK NUT, 1/2” STOVER
14	B001041	BOLT, 1/2” x 1 1/2” UNC GR5 PLT
15	C200653	GUARD L-BRACKET
16	C200755	TENSION HANDLE
17	B001043	BOLT, 1/2” x 1 3/4” UNC GR5 PLT
18	B001024	BOLT, 3/8” x 1” UNC GR5 PLT
19	B001082	CARRIAGE BOLT, 3/8” x 1”
20	B0011325	LOCK NUT, 3/8” STOVER
21	B002001	U-BOLT, 1/4” x 8 1/4” x 9 3/4” DEEP
22	B001124	LOCK NUT, 1/4”
23	B0180091	PULLEY, 2B16.0” - 1 1/4” BORE
24	B496740	KEY, 1/4” x 1 3/4”
25	B695298	MOTOR MOUNT
26	C200660	GUARD L-BRACKET - LONG
27	B011826	JACKSHAFT, 1 1/4” DIA x 27 3/4” LONG
28	B017201	BEARING, 1 1/4” DIA - 2 BOLT FLANGE INA
29	B0010835	CARRIAGE BOLT, 3/8” x 1 1/4”
30	B001149	FLATWASHER, 3/8”
31	B001409	1/2” SERRATED FLANGE BOLT

GAS ENGINE DRIVE KIT - GRAIN BELT CONVEYOR
SERIAL NOS. 77900 - 79599

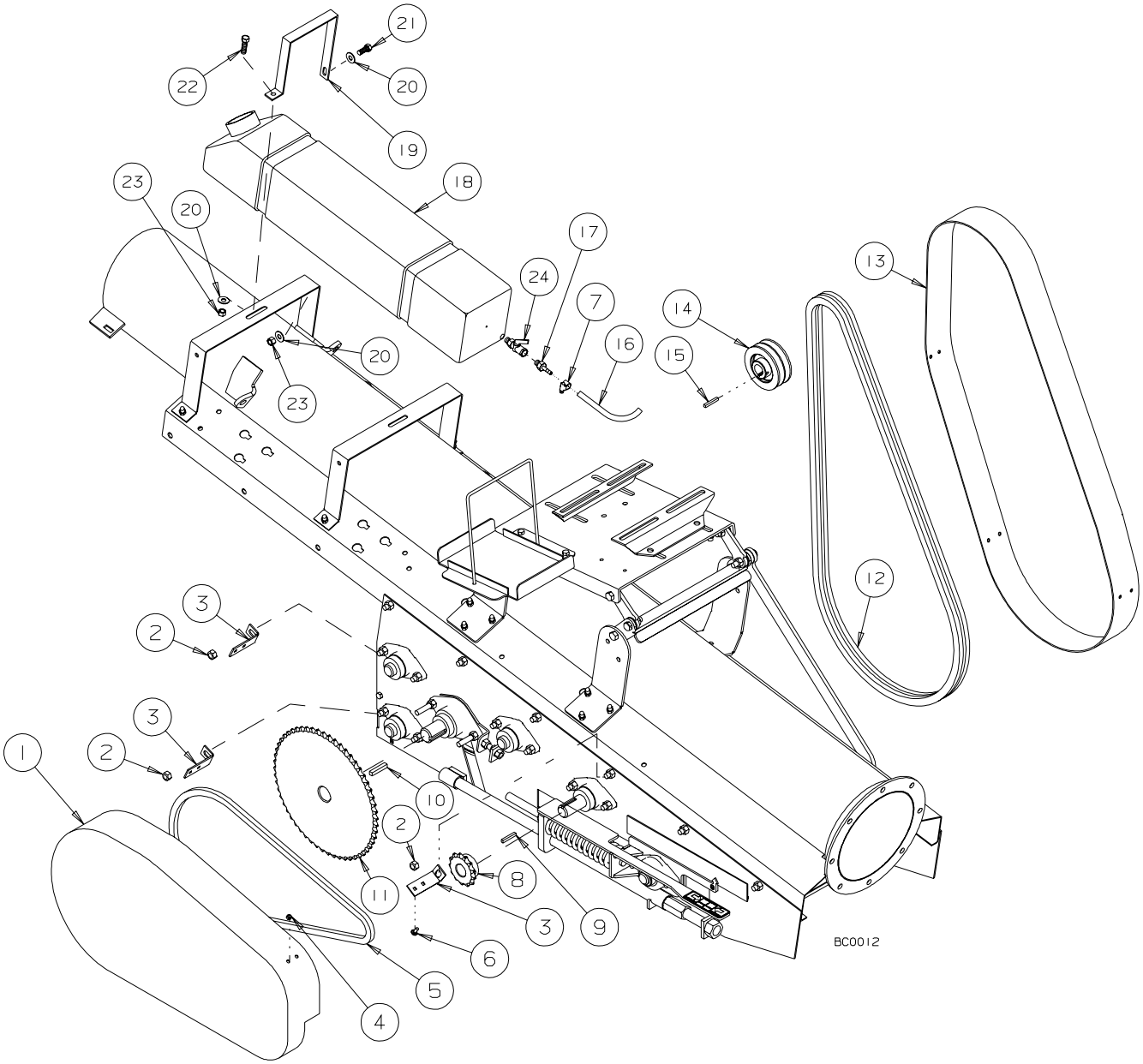

REF #	PART #	DESCRIPTION
1	B027520	CHAIN GUARD
2	B001134	LOCK NUT, 1/2” STOVER
3	C200653	GUARD L-BRACKET
4	B001123	WING NUT, 1/4”
5	B009315	ROLLER CHAIN, R60 x 85 PITCH c/w CONNECTING LINK
6	B0010799	CARRIAGE BOLT, 1/4” x 3/4”
7	B024150	1/4” HOSE CLAMP
8	B009258	SPROCKET, 60 - 13, 1 1/4” BORE
9	B496740	KEY, 1/4” x 1 3/4”
10	C200649	KEY, 3/8” x 2”
11	B009259	SPROCKET, 60 - 56, 1 1/2” BORE
12	B018068	BELT, B89
13	B027521	BELT GUARD
14	B018008	PULLEY, 2B4.5” OD - 1 1/8” BORE
15	B496740	KEY, 1/4” x 1 3/4”
16	C200650	1/4” GAS LINE HOSE x 60”
17	B028036	1/4” MPT x 1/4” HB FITTING
18	B027418	PLASTIC GAS TANK
19	C200616	GAS TANK HOLD
20	B001148	FLATWASHER, 3/8”
21	B001025	BOLT, 3/8” x 1 1/4”
22	B001024	BOLT, 3/8” x 1”
23	B0011325	LOCK NUT, 3/8” STOVER
24	B028210	SHUTOFF VALVE

ELECTRIC MOTOR DRIVE KIT - GRAIN BELT CONVEYOR
SERIAL NOS. 77900 - 79599

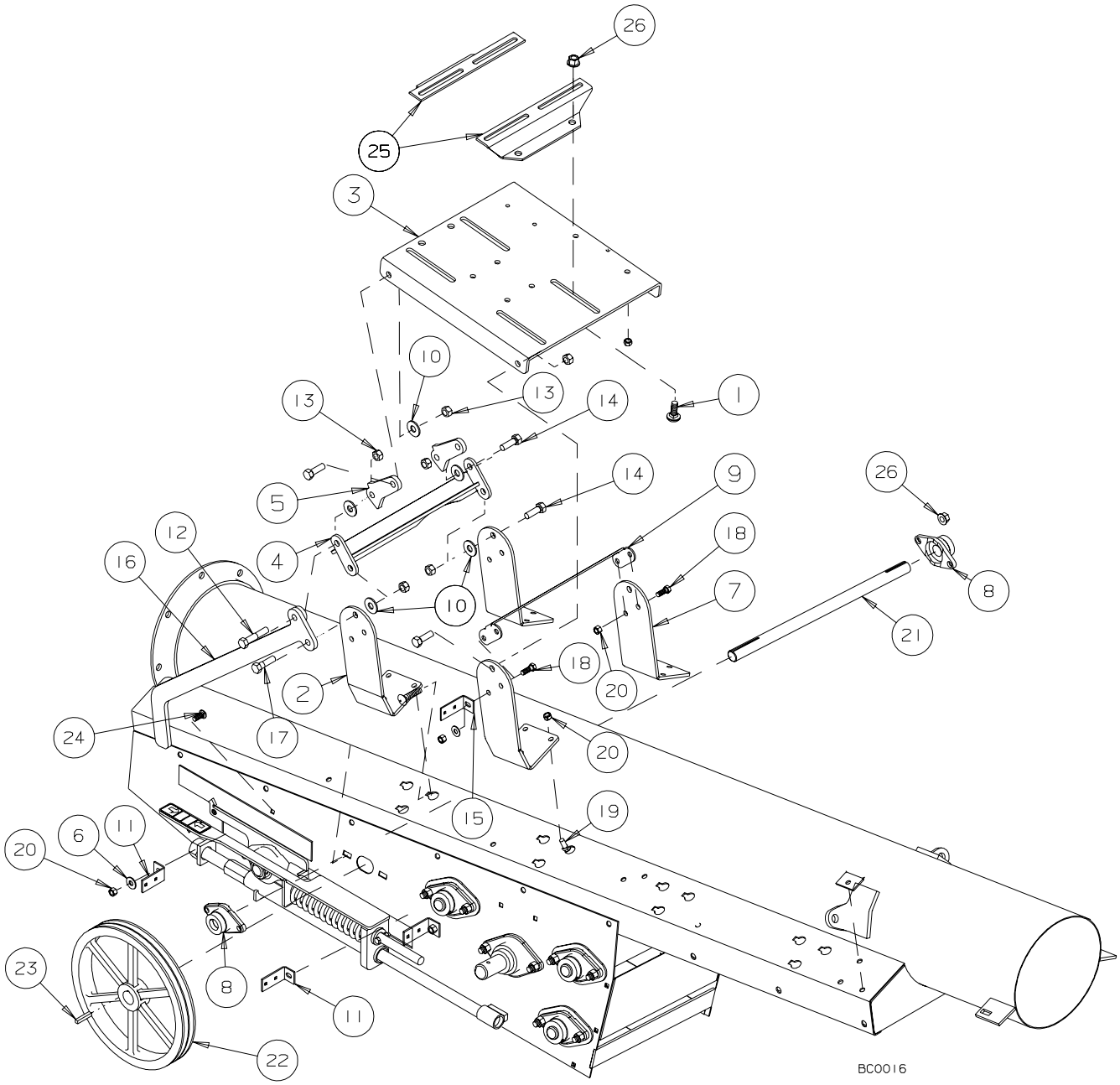

REF #	PART #	DESCRIPTION
1	B001040	CARRIAGE BOLT, 1/2” x 1 1/4” UNC
2	C200627	ENGINE MOUNT
3	C200619	ENGINE PLATE
4	C200747	MOTOR MOUNT TIGHTENER
5	C200628	ENGINE LEVER
6	B001149	FLATWASHER, 3/8”
7	C200629	ENGINE UPRIGHT
8	B017201	BEARING, 1 1/4” DIA - 2 BOLT FLANGE INA
9	C200618	MOTOR BASE BRACE
10	B001151	FLATWASHER, 1/2”
11	C200660	GUARD L-BRACKET - LONG
12	B001045	BOLT, 1/2” x 2 1/4” UNC GR5 PLT
13	B001134	LOCK NUT, 1/2” STOVER
14	B001041	BOLT, 1/2” x 1 1/2” UNC GR5 PLT
15	C200653	GUARD L-BRACKET
16	C200755	TENSION HANDLE
17	B001043	BOLT, 1/2” x 1 3/4” UNC GR5 PLT
18	B001024	BOLT, 3/8” x 1” UNC GR5 PLT
19	B001082	CARRIAGE BOLT, 3/8” x 1”
20	B0011325	LOCK NUT, 3/8” STOVER
21	B011826	JACKSHAFT, 1 1/4” DIA x 27 3/4” LONG
22	B0181208	PULLEY, 2B11.75” - 1 1/4” BORE
23	B496740	KEY, 1/4” x 1 3/4”
24	B0010835	CARRIAGE BOLT, 3/8” x 1 1/4”
25	B695298	MOTOR MOUNT
26	B001409	1/2” SERRATED FLANGE NUT

ELECTRIC MOTOR DRIVE KIT - GRAIN BELT CONVEYOR
SERIAL NOS. 77900 - 79599

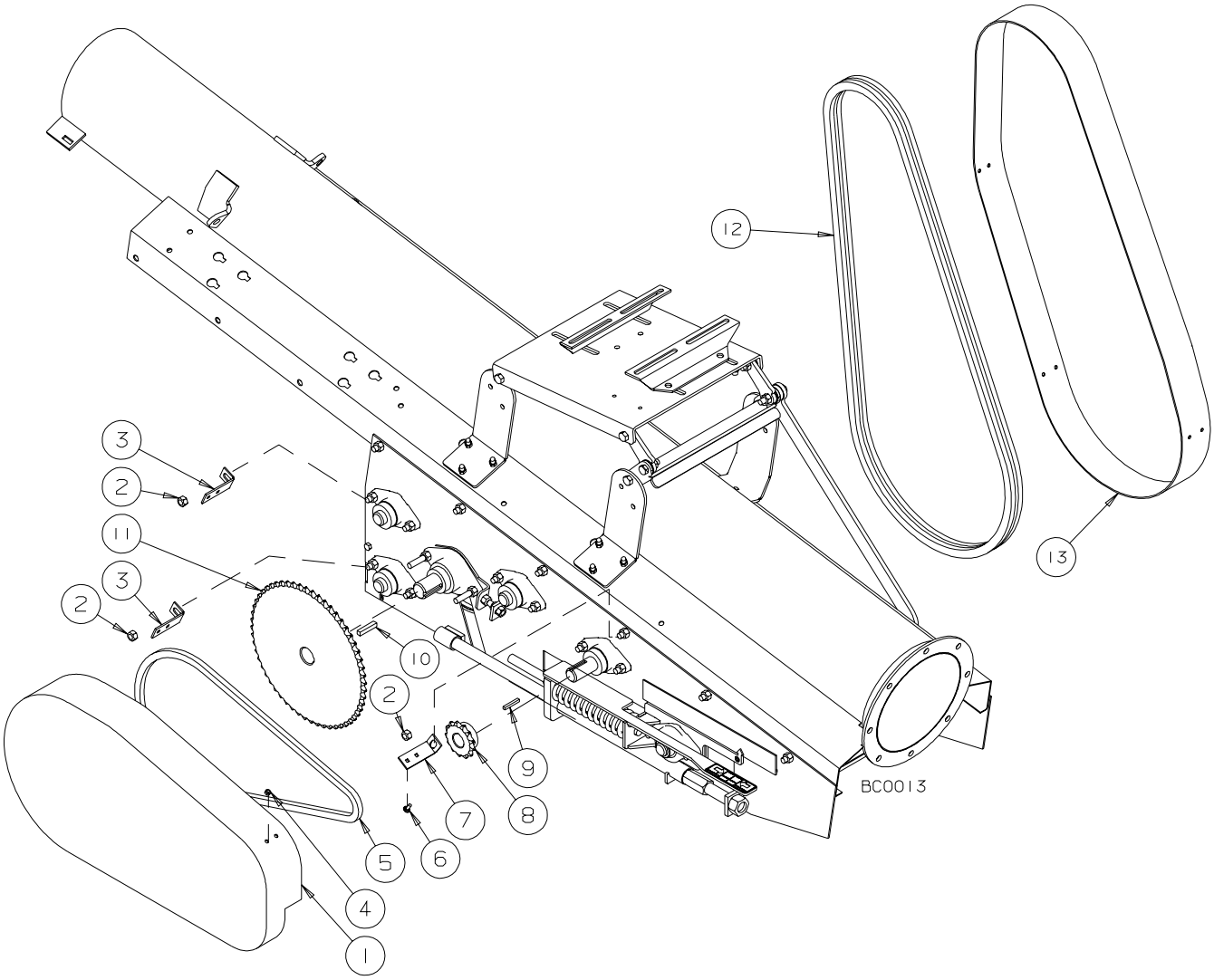

REF #	PART #	DESCRIPTION
1	B027520	CHAIN GUARD
2	B001134	LOCK NUT, 1/2” STOVER
3	C200653	GUARD L-BRACKET
4	B001123	WING NUT, 1/4”
5	B009315	ROLLER CHAIN, R60 x 85 PITCH c/w CONNECTING LINK
6	B0010799	CARRIAGE BOLT, 1/4” x 3/4”
7	C200660	GUARD L-BRACKET - LONG
8	B009027	SPROCKET, 60 - 14, 1 1/4” BORE
9	B496740	KEY, 1/4” x 1 3/4”
10	C200649	KEY, 3/8” x 2”
11	B009259	SPROCKET, 60 - 56, 1 1/2” BORE
12	B018068	BELT, B89
13	B027521	BELT GUARD